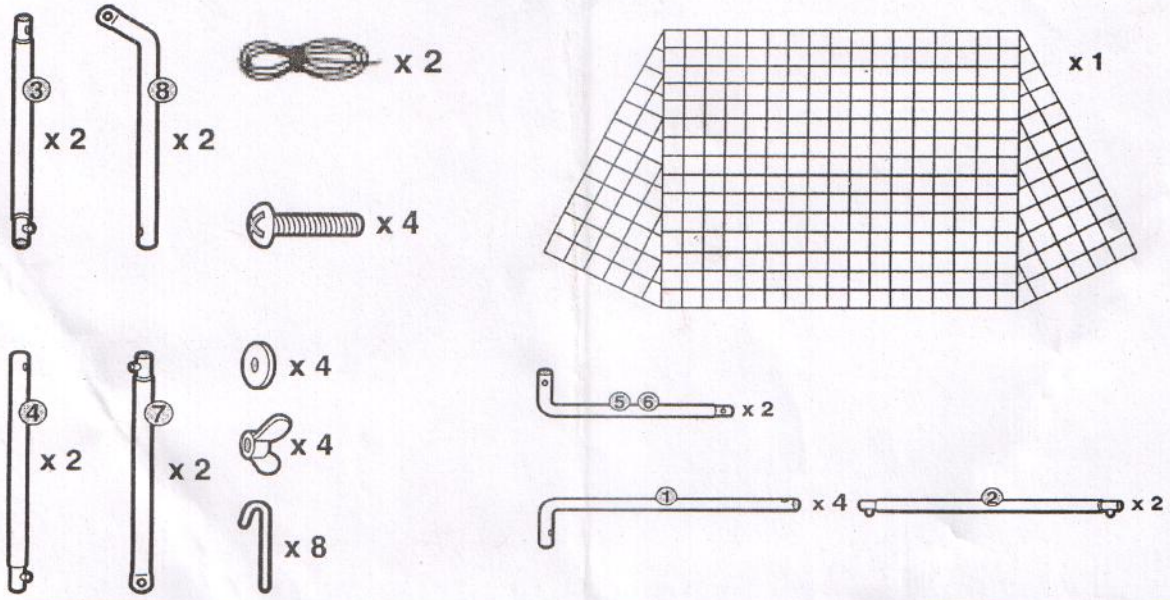
3
x 2
8
x 2
x 2
x 4
x 1
4
x 2
7
x 2
x 4
x 4
x 8
5 6
x 2
1
x 4
2
x 2

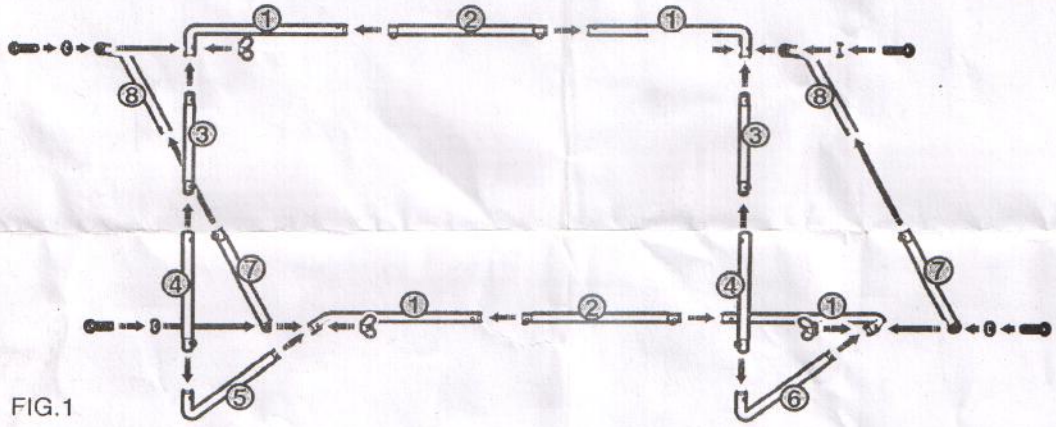
1
2
1
8
3
3
8
4
7
4
7
1
2
1
5
6

FIG.1

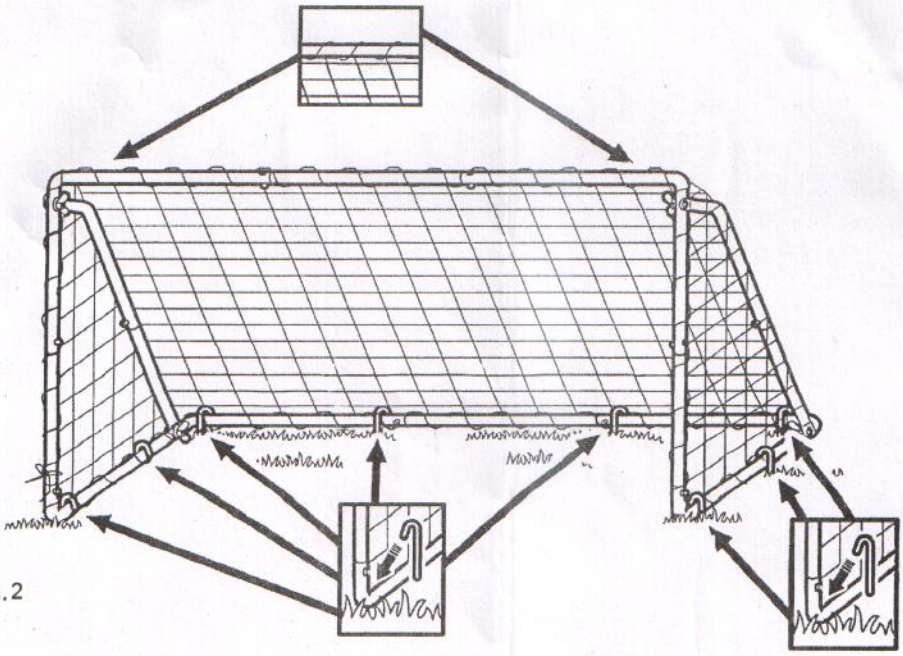

FIG.2